DTB PUMPING INTERNATIONAL
PUMP & ENGINEERING SERVICES

122 -124 ST. KILDA RD.
ST. KILDA. 3182.
PH. +613 9525 3844.
FAX +613 9525 3640.
Email: Sales@dtbpumps.com

QUALITY SERVICE..... EVERY TIME.....

Rain - Return

Rainwater Harvesting System

Operating & Installation Instructions

Complete System

The complete Rain Return Rain Water Harvesting System comprises of 3 components.

1. Rain-Return Pre-packaged pump pit with pump and plumbing installed inside the pit
2. Rain-Return Pump Controller
3. Rain-Return Level Control Switch

Figure 1

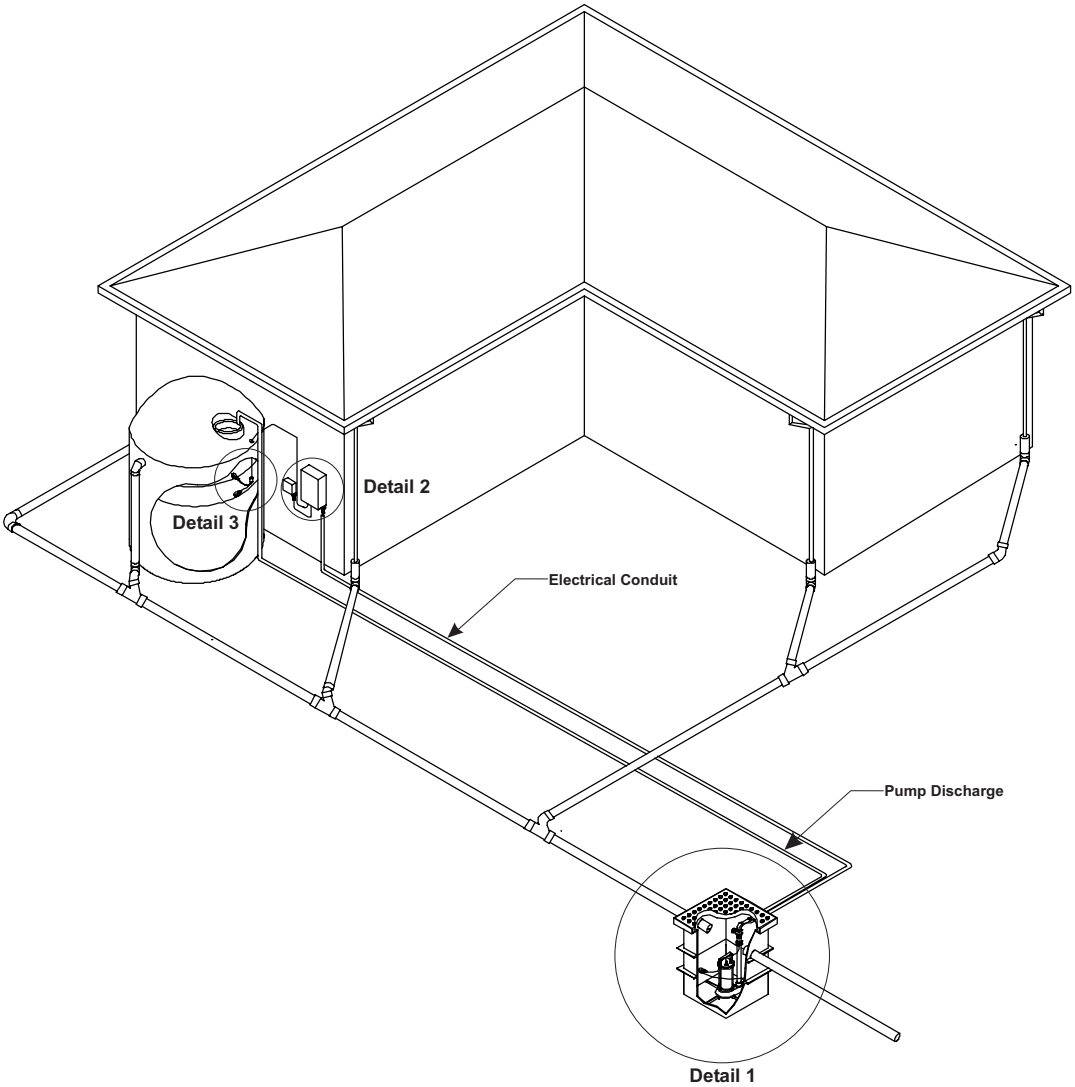

Packaged Pump Pit Installation & Operation

Position & Location
The Packaged Pump Pit is installed similar to a storm-water junction pit in the last available position where all drains meet as a common drain (See Figure 1)

Connection To Drains
After excavating a hole large enough the install the pit make a gap in the drain to insert the pit. The Inlet and Outlet holes for the drain should be installed with a hole saw or Jig Saw (As per Detail 1)

Pump Discharge
Install the pump discharge line from the Packaged Pump Pit to the rain water storage tank. It is recommended that the discharge be installed into the strainer of the storage tank to keep debris entering. Do not reduce the discharge size. Increase the discharge size to the next pipe size on runs longer than 50M. Maximum length 100M

Electrical Conduit Minimum Size 50MM
A **50mm** electrical Conduit connector is provided with the packaged system. This is the size of the conduit that must be installed. The use of long radius bends will enable the pump lead and plug to be drawn through the conduit. Install the conduit from the Pump Pit to the Rain-Return Pump Controller Max. length of 9.5M. It is recommended that the conduit terminate within 200mm of the controller to protect the pump cable. Ensure that any excess power supply cable within the pump pit is cable tied to avoid interference with the pump float. **(Important: system warrantee will be void if incorrect conduit sizes are used)**

Warning AS Wiring regulations state that cabling installed in the ground not below concrete paving must be a minimum of 0.5M.

Cabling installed in the ground below concrete paving must be a minimum of 0.3M.

<u>Please check with you local authorities for area requirements.</u>

Pump Pit Dimensions & Specs

Model	Dim	Max Invert	Discharge
DTBPE30045RR	600mmW X 600mmL X 900mmH	450mm	50mm PVC Socket
DTBPE50045RR	600mmW X 600mmL X 900mmH	450mm	50mm PVC Socket
DTBPE70075RR	1120mm Dia X 1200mmH	750mm	50mm PVC Socket
DTBPE90090RR	1120mm Dia X 1600mmH	900mm	50mm PVC Socket
DTBPE120090RR	1120mm Dia X 1600mmH	900mm	50mm PVC Socket
DTBPE150090RR	1120mm Dia X 1600mmH	900mm	50mm PVC Socket
DTBPE175090RR	1730mm Dia X 2100mmH	1400mm	80mm PVC Socket
DTBPE200090RR	1730mm Dia X 2100mmH	1400mm	80mm PVC Socket

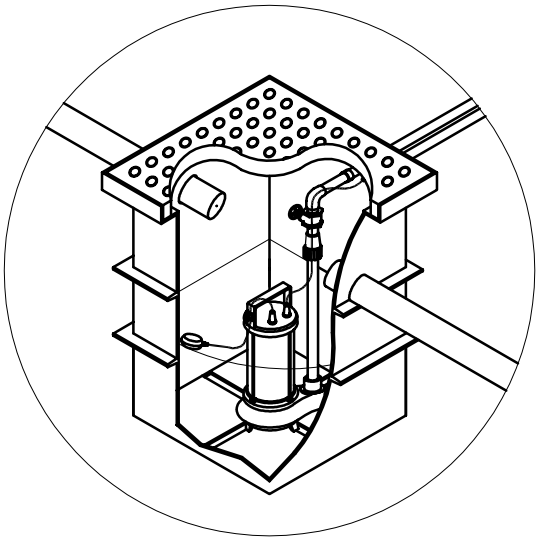

Detail 1

Controller Installation & Operation

The controller must be located within 2 metres of the power supply.
Note: Float switch cable come in 10, 20 30M lengths The cable length will determine how far the controller can be installed from the storage tank. Allow a few metres for the installation of the level control switch in the tank. (See Detail 2)

The control box must be mounted on a solid vertical surface utilising the mounting brackets on the control box.

Connect the power in lead to the power Supply turn on to test operation.
(The power on LED will illuminate).

Plug the float level lead into the control box where marked.

Check operation of the system operation by manually raising and lowering the float at the preset (300mm) weighted cable position on the drop cable. This test will turn the Controller on & off with
an audible click sound. (See Detail 3).

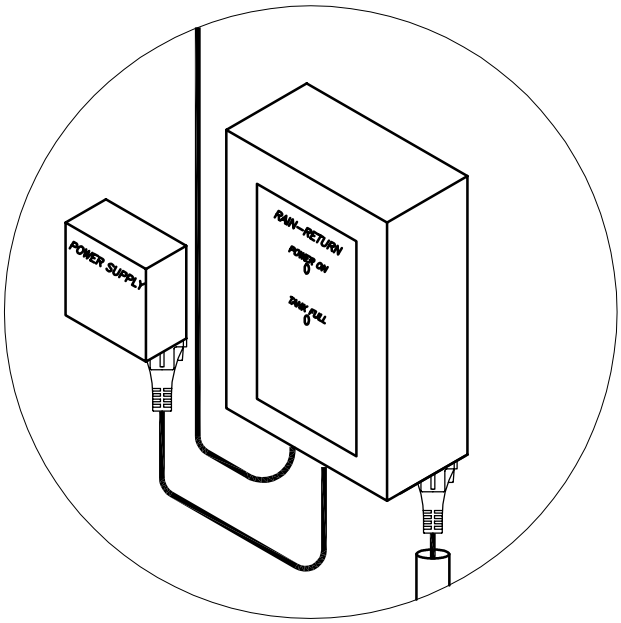

Detail 2

Float Level Switch Operation & Installation

The float level switch is designed to hang vertically inside the tank. Once the desired turn off level is established the float cable is secured at the top of tank with a zip or cable tie.

For protection the float cable and plugs can be inserted inside electrical conduit.
MINIMUM CONDUIT SIZE 40MM.

IMPORTANT:
Make sure the system stops before the over flow level is reached in the rain water storage tank.

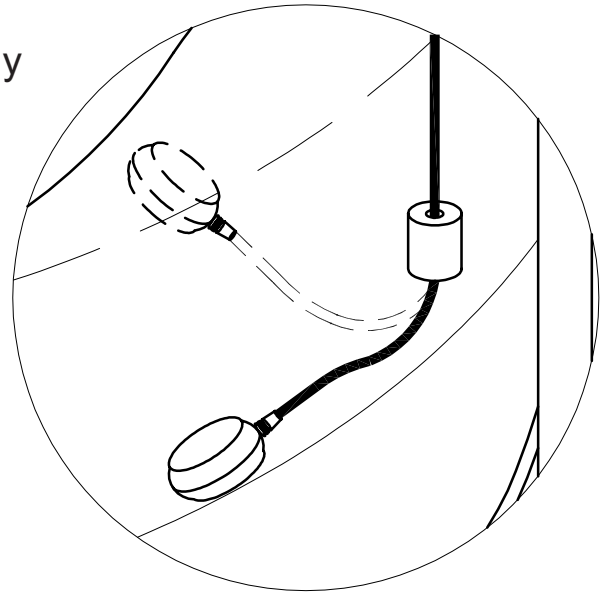

Detail 3

DTB International Pumping P/L - Warranty

This Warranty applies in many world countries and is subject to interpretation of the laws of that land and the DTB distributor. The terms of the warranty may prove to be impractical and need modification due to local conditions. Check with your local DTB agent for details.

1. Your DTB unit, when used for its designed purpose, correctly housed and vented against weather, vermin, dirt etc should render trouble free service. You should carefully read the instructions supplied and your unit should be installed and operated in accordance with these, otherwise this warranty will not apply.

The warranty does not cover damage, malfunction or failure resulting from, use on incorrect voltages, alteration, accident, misuse, neglect, abuse, faulty or improper installation, misadjustment, power mains supply problems, thunderstorms, dust storms, floods, lightning, infestation by insects or vermin, tampering by unauthorised persons, failure due to non company supplied components or products being substituted as part of the system, or exposure to abnormal corrosive conditions.

2. DTB hereby warrants in accordance with and subject to the provisions herein contained, your unit against defects in material and workmanship under normal use and service only when properly installed and connected for a period of 12 months or 500 hours operation (which ever occurs first), from the date of purchase of new equipment to the original owner and used in the original installation. In the event of a breakdown or failure of your unit or part there of, within the period of 12 months or 500 hours which prevents normal working, the Company will, if your unit is returned to the DTB country distributor or by permission to their agent, repair the breakdown or failure and replace any defective part free of charge. Freight charges to and from us, and both ways risk of loss or damage will be your responsibility. If new or replacement parts are supplied for in field replacement work, any labour or travelling charges will be your responsibility. Spare parts are normally stocked for a period of 5 years and generally stocked for the life of the unit.

3. This warranty does not extend to engines, pressure gauges, or component parts of units not manufactured by the company but where permissible and possible the Company will make available to you the benefit of any warranty of that manufacturer thereof.

4. The Company will not be liable for costs involved with the taking out and reinstalling of equipment that has failed during the warranty period. This includes electricians time with wiring costs, and plumbers time and materials.

5. This warranty does not extend to or cover your Unit or any part of it which in the opinion of the Company has worn by fair wear and tear, abraded or corroded by fluid pumped, run in a dry condition, operated at high temperatures or outside the technical specification of the equipment, or has been damaged or rendered defective by accident, wilful act, negligence (other than that of the Company) misuse, alteration, or repair carried out by other than the Company (or by permission with its dealers), usage of other than the Companies parts, operation on voltages or frequencies other than indicated on the rating plate, incorrectly set voltage regulator, electrical fusion, lightning, or by force majure. This warranty is an exclusive warranty and is in lieu of all other warranties and conditions, expressed or implied, whether statutory or otherwise.

6. Save as fore said the Company shall not be liable for any loss or damage of any kind whatsoever (including injury or death to persons or animals or loss or damage to property) whether suffered or incurred by you or by some third party where such loss or damage arises in relation to or as a result of the Unit or any part thereof and whether arising wholly or partly as a result of negligence of the Company, its servants or agents or otherwise. Without limitation upon the provisions of the foregoing provisions of this clause the Company shall not be liable for any consequential loss or damage (including financial loss or damage) and in no event and in no circumstances shall the liability of the Company to you or any third party exceed the total purchase price of the Unit or parts thereof in question.

7. Nothing in this warranty, limits or restricts, or is intended to derogate from, any right or remedy which the purchaser or ultimate user of the Unit may have pursuant to Australian State and/or Australian Federal Consumer Protection Legislation and where necessary shall be so read and construed.

8. Claims under this warranty must give evidence of date of purchase, model and serial number of the pump or equipment, the claimant's name, address and phone number.